Taylor & Francis
Taylor & Francis Group

Science and Technology for the Built Environment

ISSN: (Print) (Online) Journal homepage: https://www.tandfonline.com/loi/uhvc21

Predictive control strategies for optimizing temperature stability in instantaneous hot water systems

Ismael A.S. Ehtiwesh , André F. Quintã & Jorge A.F. Ferreira

To cite this article: Ismael A.S. Ehtiwesh , André F. Quintã & Jorge A.F. Ferreira (2021): Predictive control strategies for optimizing temperature stability in instantaneous hot water systems, Science and Technology for the Built Environment

To link to this article: https://doi.org/10.1080/23744731.2021.1890959

Accepted author version posted online: 15 Feb 2021.

Predictive control strategies for optimizing temperature stability in instantaneous hot water systems

Ismael A.S. Ehtiwesh[1,2,*], André F. Quintã[3], Jorge A.F. Ferreira[3]

[1]University of Aveiro, Mechanical Engineering, Campus Universitário de Santiago, Aveiro 3810-193, Portugal

[2]Sabratha University - Faculty of Engineering, Department of mechanical Engineering, Sabratha, Libya

[3]University of Aveiro, Department of Mechanical Engineering, Santiago University Campus, Aveiro 3810-193, Portugal

[*]ehtiwesh@gmail.com

Domestic hot water production is responsible for a significant part of domestic energy consumption; instantaneous gas heating devices are widely used because they don't require reservoirs, therefore have a competitive use/consumption ratio compared to other technologies. However, users' perception of comfort is severely affected by sudden changes in temperature outside the desired temperature. The instability of the water temperature with overshoots and undershoots is the most common disadvantage, which occurs mainly due to sudden changes in the water flow requested by users and the response delays inherent to the heating system. Traditional heat cell power controllers have difficulties in responding to these problems in a timely manner, as they don't have the capacity to anticipate the effects of sudden variations in water flowrate. In this work, predictive control strategies were developed which, due to its predictive nature, allows anticipating and correcting the negative effects of sudden variations of water flowrate in the temperature. A comparative analysis of model based predictive controllers (MPCs), with and without adaptive function, with traditional controllers used in the tankless gas water heaters (TGWHs) was carried out. Tests in a simulated environment demonstrated better performances in the stabilization of temperature during sudden changes in water flowrates.

Keywords: thermal systems, hot water, predictive control strategies, MPC, adaptive control, FFPID, controllers, real time, time delay

Introduction

A domestic hot water production contributes between 15% and 40% of the energy consumed within residential dwellings over the world (Bourke, Bansal and Raine, 2014). Among the various technologies for water heating available, TGWH devices are within the most sold and have become an efficient means for producing hot water with low carbon emissions (Bourke, Bansal and Raine, 2014). Their advantages compared with storage tank heaters are smaller size, continuous flow of hot water, longer estimated useful life, and lower energy consumption (Yuill, Coward and Henze, 2010). However, they require more power to provide the flow capacity desired by typical consumers, which makes it difficult to control. In addition, users' perception of comfort is severely affected by sudden changes in water temperature in relation to the desired temperature (Costa, Ferreira and Guilherme, 2016). Water temperature instability with overshoots and undershoots is the most common disadvantage. This is mainly due to sudden changes in water flow and response delays inherent to the heating system, which cannot be predicted by conventional embedded controllers (Costa, Ferreira and Guilherme, 2016). Typical advanced TGWH devices use valves, for modeling the gas flow and water flow rate, temperature sensors, and closed-loop Proportional Integrative Derivative (PID) control to maintain the temperature at the device outlet close to the set point (Quintã *et al.*, 2019). Figure 1 (Costa, Ferreira and Guilherme, 2016) shows the temperature overshoots and undershoots of a 58kW nominal power TGWH for sudden changes in water flow rate. In fact, these are real data of a laboratory experimental test performed by the manufacture, where the device feedforward PID controller was implemented to stabilize the outlet hot water temperature at 60ºC. However, with the unpredictable changes in the hot water flow rate, the temperature overshoots and undershoots are neither acceptable nor comfortable for the users, and in extreme scenarios has become a safety issue.

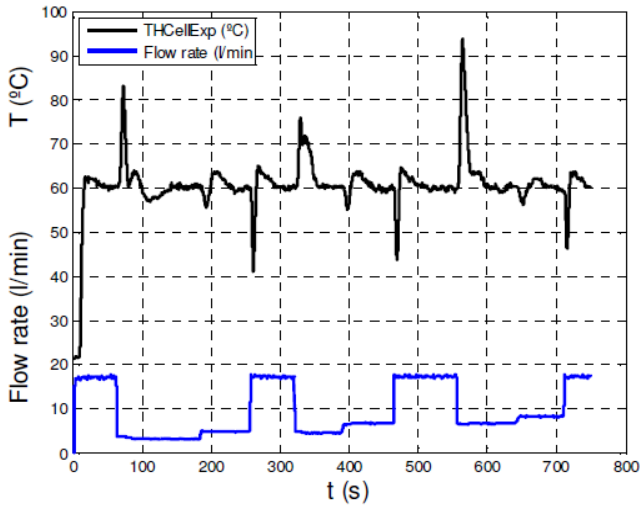

Figure 1: Experimental data of the hot water temperature and flow rate of a 58kW TGWHs heat cell (Costa, Ferreira and Guilherme, 2016).

An experimental study (Fernández-Seara *et al.*, 2013) was carried out to evaluate the performance of a space/water heating system using an on demand external domestic hot water production system with different control strategies taking into consideration four different control valves. Experiments were carried out to heat the water in the tank to 80 °C, considering flow rates of 5, 10, 15 and 20 L/min at a defined temperature of 45 °C. It was concluded that the control strategy significantly influences the quality system performance and thermal performance. In the work conducted by (Costa, Ferreira and Guilherme, 2016) various models of TGWH components were developed, which allowed the construction of various simulation scenarios, representing various hardware configurations, intending to evaluate the performance of TGWH devices in reducing temperature overshoots and undershoots. The proposed solution includes a small tank, acting as a thermal capacitance, a mixing valve to mix the tank, heat cell water flows, and a cold-water bypass valve connected to the output to eliminate the outlet temperature overshoots. It was concluded that the developed solution effectively prevents the occurrence of hot water temperature overshoots and overshoots. In addition, it reduces time delay and wastes water during the waiting period when the

device is cold starting. Yuill et al. (Yuill, Coward and Henze, 2010) implemented seven different control strategies carrying out experimental tests to address the effectiveness of each control approach taking into consideration electric instantaneous water heaters. It was considered different configurations of feedback, feed-forward, and combined feedback with feed-forward controllers that show different performances regarding the temperature stabilization. Henze et al. study (Henze, Yuill and Coward, 2009) described the development of a novel approach to control the water temperature of tankless water heaters (TWHs). This approach used a model based predictive control (MPC) to minimize the output temperature error. A dynamic heat transfer model for an electric TWH was developed inside the MPC-based controller. The controller was connected to a physical TWH prototype, demonstrating effective control of the TWH outlet temperature. An Artificial Neural Network Controller, embedded on a low-profile microcontroller, for a commercial tankless electric water heater lead to lower temperature peaks and recovery times compared with classic PID control (Laurencio-Molina and Salazar-Garcia, 2018).

Bobal et al. (Bobal *et al.*, 2013) (Holiš and Bobál, 2007) (Holiš and Bobál, 2015) (Bobál *et al.*, 2012) and (Bobál *et al.*, 2014) implemented their own Matlab and Simulink toolboxes taking into consideration a Smith predictor control approach combined with different control strategies, namely digital PID, digital pole assignment, and model predictive control applied to the control of heat exchangers. Smith's predictor is a self-tuning method, and its main objective is to include time delay in the controller (Hang, Lim and Chong, 1989). This method is identified through offline methods for checking the system simulation and determining the initial estimates of the model parameters and uses online least-square recursive methods in the generalized adaptive predictive control.

The objective of this work is to develop control strategies to improve the performance of instantaneous hot water devices. The study covers two different control strategies: i) PID control with feed-forward that widely used (Devasia, 2002), for water heaters (Grant, Burch and Krarti, 2011) (Yuill, Coward and Henze, 2010), and in a variety of industrial applications (Hunt, Meyer and Su, 1996), in particular, as already mentioned, David P. Yuill et al. (Yuill, Coward and Henze, 2010) study presents a comparative analysis of controllers used in tankless water heaters taking into consideration the feedforward component, using several experimental scenarios. ii) Model-based predictive control, which considers the most promising alternative solution that was used by (Henze, Yuill and Coward, 2009) to regulate the temperature in instantaneous electric water heaters.

Several advanced control strategies were proposed to improve TGWH water temperature stabilization, in (Wang, Zang and Ning, 2011), a fuzzy controller is proposed as a black-box gain scheduler for the parameters of a PID controller. An adaptive fuzzy control algorithm is presented in (Haissig and Woessner, 2000) that is adapted to the changing conditions (water flow rate and inlet water temperature) and automatically adjusts the feedforward curves of the gas valve controller. A Smith predictive controller is constructed based on grey-box model techniques, hybrid neuro-fuzzy model (Vieira, Dias and Mota, 2005), genetic algorithms were used for the determination of some unknown parameters. A dynamic neuro-fuzzy control system is presented in (Xu *et al.*, 2008) for controlling a gas-fired water heater. The controller comprised a fuzzy logic controller in the feedback configuration and two dynamic neural networks in the forward path. A closed-loop MPC strategy for optimally operating HPWH and the instantaneous shower was designed by Wanjiru et al. (Wanjiru, Sichilalu and Xia, 2017). The strategy is used to ensure efficient use of both

energy and water. The MPC controller operates the devices during the low-cost off-peak period. The closed-loop MPC strategy is superior to the open-loop optimal control strategy due to its robustness in dealing with unpredictable disturbances present in the system. Besides, the study concluded that the control strategy used for both hot water devices powered using integrated renewable systems is suitable for per-urban homeowners.

In addition, and due to the dominant nonlinear dynamics in the behavior of TGWHs, the classic design of MPC controllers is more complicated and can lead to performance drops (Aliskan, 2018). Therefore, an adaptive predictive control strategy was also taken into consideration in this study, due to the adaptive MPC provides a new linear model at each time interval, under dynamic operating conditions. Therefore, it makes predictions more accurate for the next time interval, in contrast to the classic MPC which uses a fixed internal model.

Experimental platform

A virtual test bench was developed (Oliveira *et al.*, 2019) (Quintã *et al.*, 2019) and a residential and commercial TGWH device (Hydro 4600 F WTD10-4KME 23 JU) was integrated, which is a non-condensing model with 22kW thermal power and 86% thermal efficiency (Figure 2). The virtual bench and the TGWH, incorporate several sensors as depicted in Figure 3, namely, carbon monoxide detector, K type thermocouples (0 to 910 °C) and RTD Pt100 temperature probes (class A), pressure sensor with display (0-10 bar), and water flow meter, which allow measuring the variables that utilized in the feedback loop of the control systems (Karman vortex, 2 to 16 L/min). Besides, manual flow and proportional electric actuation valves are used to simulate the hot water demand. The workbench allows to perform hardware in the loop simulation (HILS) experiments, namely for the testing of controllers implemented in

microcontrollers, normally used in commercial TGWH devices. A dSPACE DS1104 controller board is used to perform real-time simulation, data acquisition, and interaction with hardware components, sensors, actuators and electronic control unit. In addition, it allows running the simulations in real time without any integrated hardware or prototype.

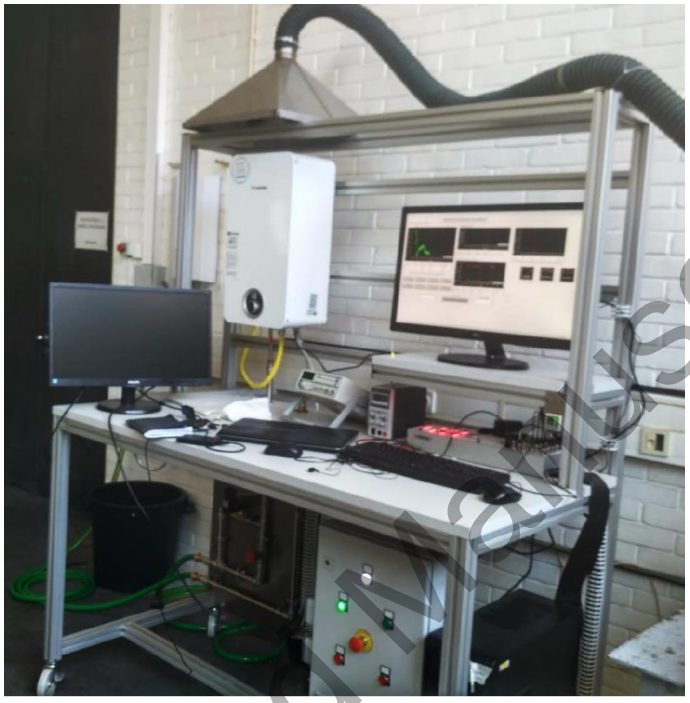

Figure 2: Laboratory TGWH test bench.

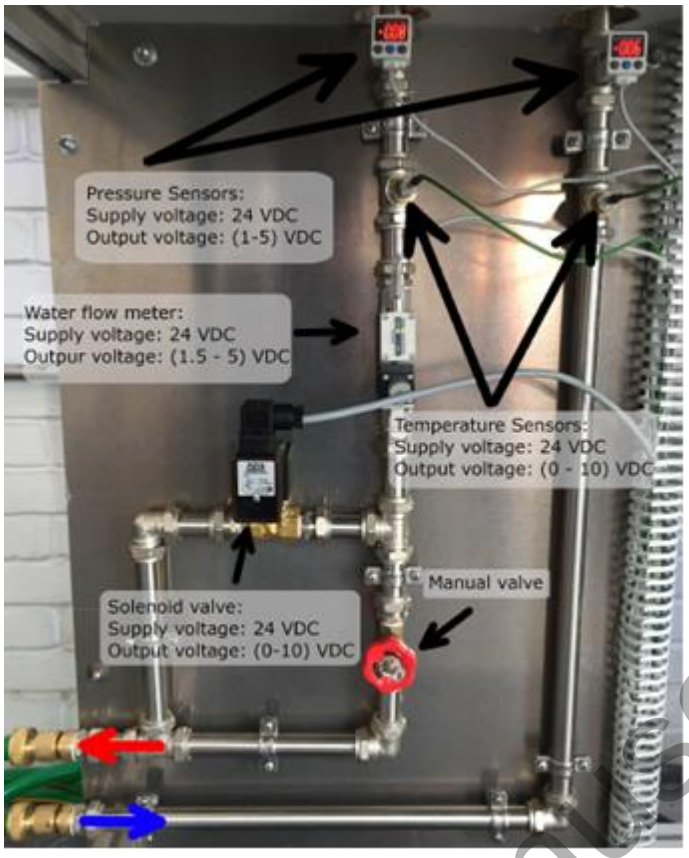

Figure 3: Test bench components associated with control and sensing.

Mathematical Modeling

The mathematical models of the individual components were developed in the study carried out in (Quintã *et al.*, 2019). In this work, the model was simplified, with a special emphasis on the control volume of the heat cell, taking into account the laws of heat transfer and energy balance. The heat cell involves the gas combustion burner and the transfer of heat to the water by the heat exchanger with water condensation in the flue gases. The water and the metal (copper alloy) were assumed to be in thermal equilibrium and the densities are kept constant. The TGWH plant model is a semi-empirical nonlinear model and the energy balance equation of the distributed parameter model is given as follows:

$$C\ dT/dt = \dot{Q} + \dot{m}c_{p,w}(T_{in} - T) \quad (1)$$

where C is the thermal capacitance defined as $1/(m_w c_{p,w} + m_w c_{p,m})$, $\dot{Q}$ is the thermal power applied to the heat cell, T is the heat cell temperature, $\dot{m}$ is the mass flow rate, m is mass and c_p is specific heat capacity for metal and water; with this simplification, Eq. 1 becomes,

$$dT/dt = \left(1/(m_w c_{p,w} + m_w c_{p,m})\right)\left(\dot{Q} + \dot{m} c_{p,w}(T_{in} - T)\right) \quad (2)$$

Figure 4 presents the TGWH Heat Cell lumped space model implemented within Matlab and Simulink environment. The plant model for developing the predictive controllers was linearized empirically with the delays at a constant water flow rate (10 L/min). The TGWH plant model inputs are the controller output power and the disturbance water flow rate, while the output is the water temperature at the outlet. The delay associate with the thermal power delivery is assumed as a constant input time delay. The output delay is time-varying and depends on the water velocity and pipe section as given in Eq. 3 where r_i is orifice radius and L_i is water circuit length inside the heat exchanger. Implicit dead-time compensation presented within the study (Santos *et al.*, 2012) is used to implement the time delay that varies with the water flow rate.

$$t_{output\ timedelay} = \pi . r_i^2 . L_i / \dot{m} \quad (3)$$

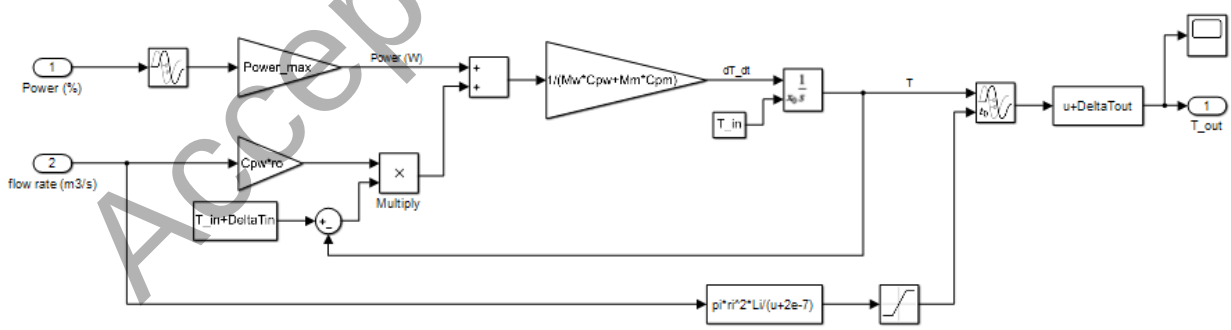

Figure 4: Simulink model diagram of plant (TGHW).

Temperature controllers

As already mentioned, this research work aims at the development of advanced control approaches to improve the temperature stability of instantaneous water heaters, namely, tankless gas water heaters. Classical control techniques such as PID, rely on present and previous measurements for the system regulating (Ehtiwesh and Durović, 2009). Explicitly PID does not use the dynamic characteristics of the system to command the manipulated variables (Khaled and Pattel, 2018). The optimal performance of the closed-loop system is achieved in the course of tuning the proportional, integral, and derivative terms. However, PID is a common widely and cheap choice for industrial feedback control because it's easy of understanding and tuning. Model predictive control has been considered as the most promising alternative solution for instantaneous water heaters (Henze, Yuill and Coward, 2009). It has made a significant impact on control engineering and has been used in almost all industrial fields (Chen *et al.*, 2011). The flowchart shown in Figure 5 (Khaled and Pattel, 2018) helps the engineer to decide when the use of MPC is appropriate and is a guide to find out if MPC is the appropriate control option instead of PID control.

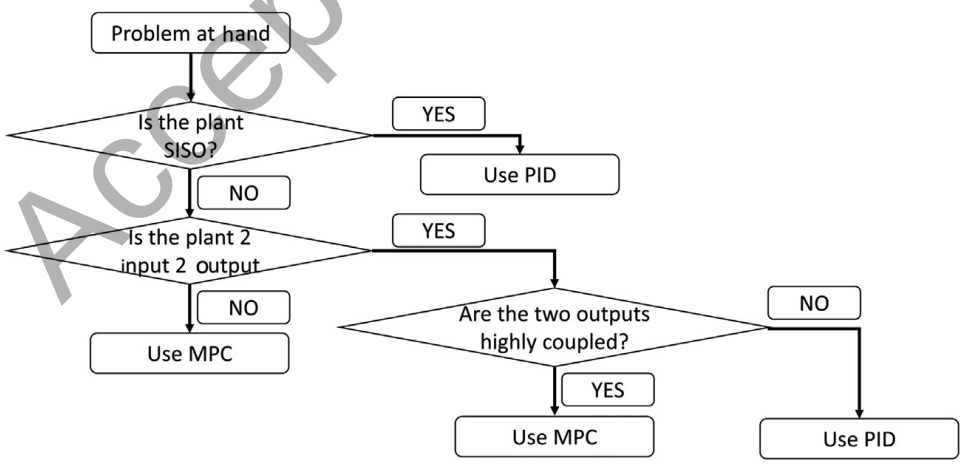

Figure 5: Flowchart to selecting PID vs MPC (Khaled and Pattel, 2018).

Feed forward PID control

Integrated feed-forward with feedback control (FFPID) can significantly improve the system performance over simple feedback control whenever there is a major disturbance that can be assessed before it impacts the process. Feed-forward control can reduce the effect of disturbance measured at the output of the process and is often used in conjunction with feedback control to track changes at the set point and suppress unmeasured disturbances that occur in the actual process. It was implemented to evaluate and validate the predictive controllers since FFPID techniques are normally used by TGWHs manufacturers. This controller has an improved performance in temperature control without imposing a significant cost of implementation. The FFPID control model was developed to define the thermal power needed to heat the water, as schematically represented in Figure 6. The feedforward component is based on the heat exchanger energy balance equation that calculates the predicted thermal power $\dot{Q}_{FF}$ needed to heat the inlet water T_{in}, to the required set point temperature T_{set}, in steady-state conditions, for the measured water flow rate $\dot{m}$, where $c_{p,w}$ is the water' specific heat capacity at constant pressure, that is given as follows:

$$\dot{Q}_{FF} = \dot{m}_{in} c_{p,w} (T_{set} - T_{in}) \quad (4)$$

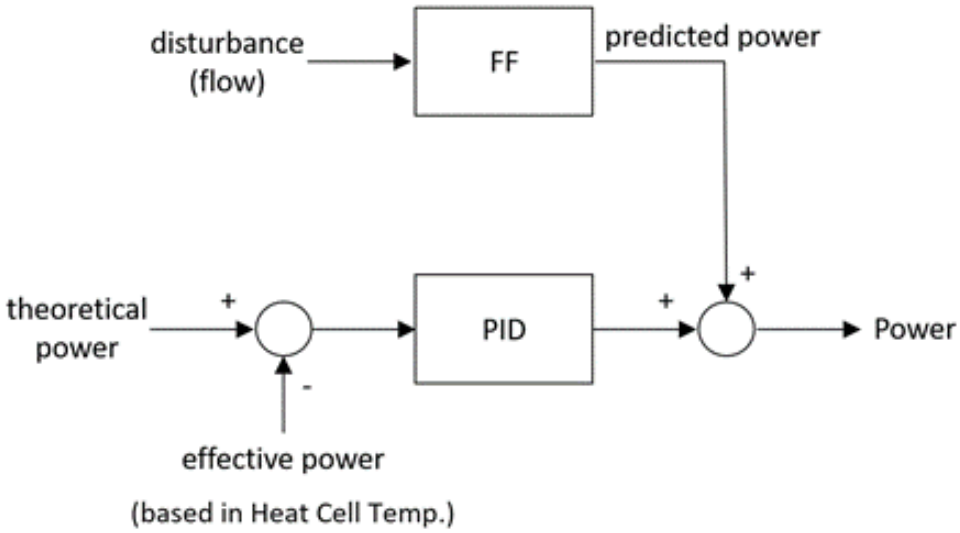

Figure 6: Layout of the combined feedforward - feedback control.

The controller model was implemented using the TGWH Heat Cell developed plant model (Figure 4) within the Simulink framework, and the parameter estimation and subsequent validation are achieved with experimental data. The FFPID controller is depicted in Figure 7. The model is based on the energy balance equation of the heat exchanger that calculates the predicted power for heating the water to reach the set point tracking temperature required in the steady-state formulation based on the measured flow. For the PID component, the feedback power is calculated based on the temperature measured at the heat cell outlet.

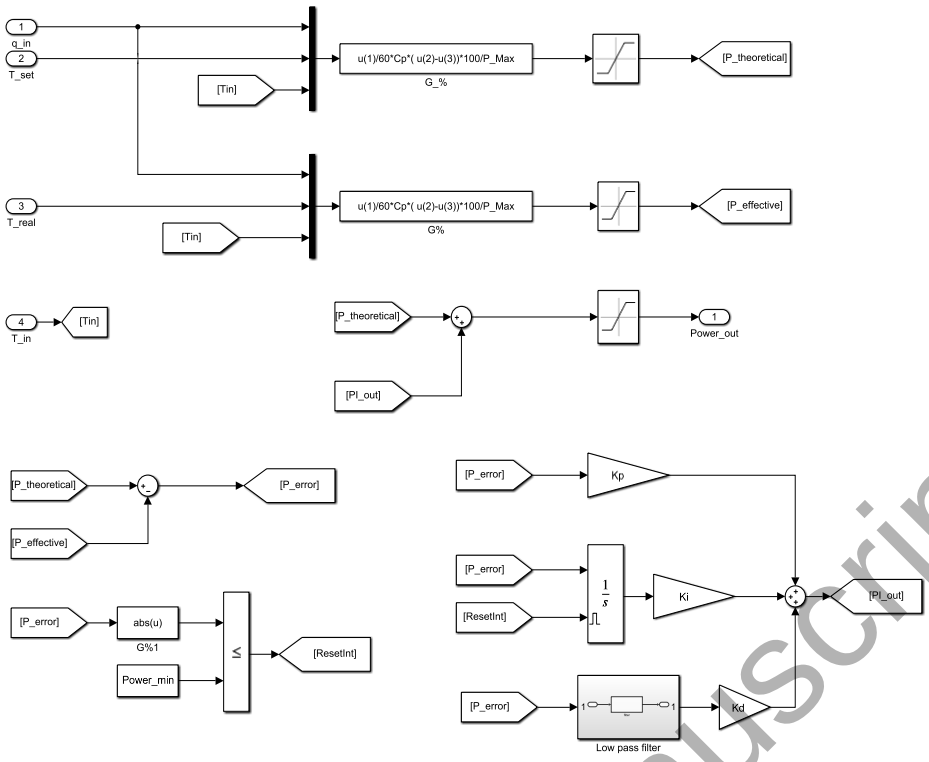

Figure 7: Simulink block diagram of the FFPID controller.

Model predictive control

Model Predictive Control (MPC) as its name implies, is a feedback control technique that relies on a model, an optimization solver, a receding horizon control and optimization of a quadratic programming (QP) problem. The main advantage lies in the possibility of dealing with multi-variable control problems with inequality restrictions both in the process inputs and outputs (Li *et al.*, 2015), and also in the possibility of supporting restrictions directly in the design procedure. These restrictions can be imposed on any part of the system variables, such as states, outputs, inputs, and actuator control signals that affect the behavior of the closed-loop system.

The methodology of the controllers belonging to the MPC family is characterized by the strategy represented in Figure 8 (Camacho and Bordons, 1998). The future outputs of a determined horizon N (the prediction horizon) are predicted at each instant t using

the process model. These predicted outputs $y(t + k|t)$ for $k = 1 \ldots N$ depend on the previous input and output values and on the future control signals $u(t + k|t)$, for $k = 0 \ldots N-1$, at the instant $t + k$ computed at instant t.

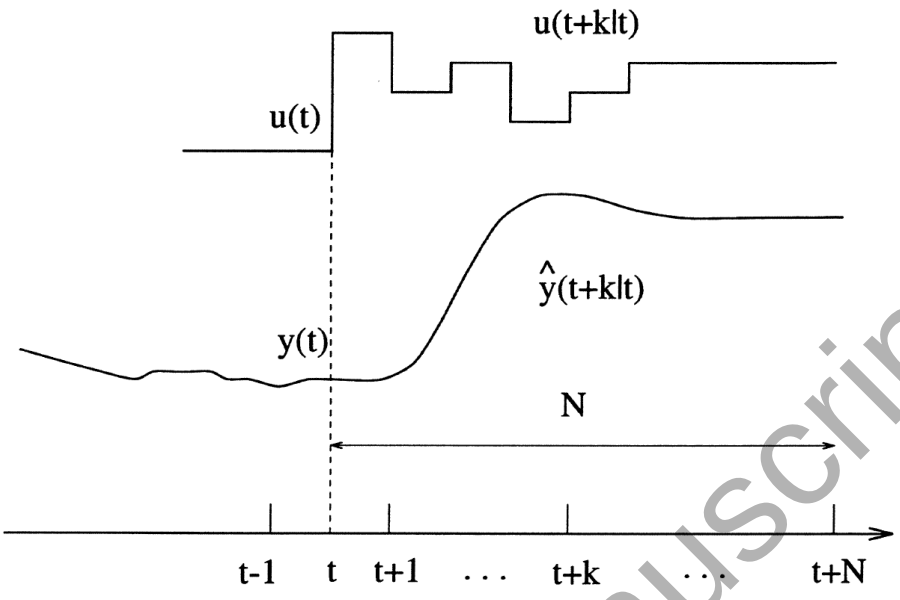

Figure 8: MPC strategy (Camacho and Bordons, 1998).

Figure 9 (Khaled and Pattel, 2018) presents a simplified diagram of the MPC basic structure, the tracking error is one part of the standard cost function that contains four elements (Bemporad, Ricker and Morari, 2019):

$$J(Z_i) = J_y(Z_i) + J_u(Z_i) + J_{\Delta u}(Z_i) + J_\varepsilon(Z_i) \quad (5)$$

where:

Z_i the sequence of manipulated variables (MVs) from sample i to $i+p-1$,

p the prediction horizon,

J_y the cost function for output reference tracking,

J_u the cost function for manipulated variable tracking,

$J_{\Delta u}$ the cost function for change in manipulated variables, and

J_ε the cost function for constraint violations.

The QP problem optimizes the objective $J(Z_i)$ (cost function), nonnegative measure of controller performance to be minimized. The weights need to be adjusted to tune the controller, and constraints are physical bounds on MVs and plant output variables.

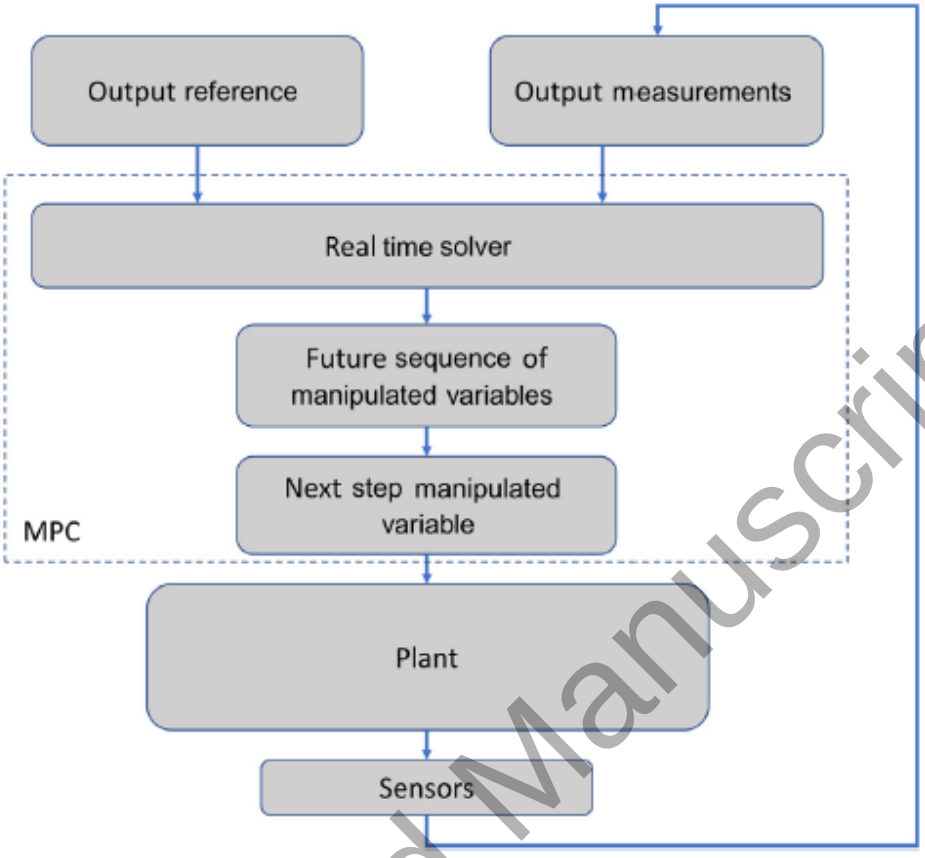

Figure 9: Simplified flowchart of MPC control (Khaled and Pattel, 2018).

The cost functions mentioned in Eq. 5 are defined by the following relations:

$$J_y(Z_i) = \sum_{j=1}^{ny} \sum_{k=1}^{p} \left\{ \frac{w_{k,j}^{y}}{s_j^{y}} \left[r_j(i+k|i) - y_j(i+k|i) \right] \right\}^2 \tag{6}$$

$$J_u(Z_i) = \sum_{j=1}^{nu} \sum_{k=0}^{p-1} \left\{ \frac{w_{k,j}^{u}}{s_j^{u}} \left[u_j(i+k|i) - u_{j,target}(i+k|i) \right] \right\}^2 \tag{7}$$

$$J_{\Delta u}(Z_i) = \sum_{j=1}^{nu} \sum_{k=0}^{p-1} \left\{ \frac{w_{k,j}^{\Delta u}}{s_j^{u}} \left[u_j(i+k|i) - u_j(i+k-1|i) \right] \right\}^2 \tag{8}$$

where *ny* is the number of plant output variables, *nu* is the number of manipulated variables and the QP decision (Z_i) is given as follows:

$$Z_i^T = [u(i|i)^T \quad u(i+1|i)^T \ldots\ldots\ldots u(i+p-1|i)^T \quad \varepsilon_i] \tag{9}$$

where:

$y_j(i+k|i)$: The predicted value of jth plant output at k^{th} prediction horizon step,

$r_j(i+k|i)$: The reference value of jth plant output at k^{th} prediction horizon step,

S^j_y: The scale factor of jth plant output,

$W^y_{k,j}$: The tuning weight of jth plant output at k^{th} prediction horizon step (dimensionless).

u_j,target(i+k|i): The target value for j^{th} MV at k^{th} prediction horizon step,

S^u_y: The scale factor for j^{th} MV, and

$W^u_{k,j}$: The tuning weight for j^{th} MV at k^{th} prediction horizon step (dimensionless).

The variables n, p, s, and w are constant controller specifications. The controller receives the reference values $r_j(i+k|i)$ and u_j,target(i+k|i) for the entire prediction horizon, and uses the state observer to predict the plant outputs $y_j(i+k|i)$, which depend on manipulated variable adjustments (Z_i), measured disturbances (MD) and state estimates. The controller employs a dimensionless nonnegative slack variable (ε_i), which quantifies the worst-case constraint violation, the corresponding performance measure is:

$$J_\varepsilon(Z_i) = \rho_\varepsilon \varepsilon_i^2 \tag{10}$$

ε_i is the slack variable at control interval i (dimensionless), and ρ_ε is constraint violation penalty weight (dimensionless).

In the implemented MPC under study, process output measurements are used to update the state values for feedback purposes, and a discrete LTI state-space system is employed to predict the response of the plant within the prediction horizon. The cost

function is the quadratic error between the reference signal (50°C) and the MPC model response using the constrained thermal power inputs. The constraints on the action control are that the thermal power (input) is limited from 0 to 1 (1 implying 100%). The solver computes the future sequence of manipulated variables within the control horizon (M), but only the first value of the sequence is directed to the actuator for the following time step. At the new time step, the state values are recalculated and advanced based on the sensory information and applied manipulated variables. Optimization is repeated to estimate the optimal future sequence of manipulated variables within the prediction horizon. The final step as any MPC iteration is to prove the predicted input in the system.

The TGWH plant model is used along with the MPC toolbox within the Simulink framework as represent in Figure 10. The model parameter estimation and subsequent validation were performed with an associated optimization platform using a discrete state space system. The MPC design entails creating linearized plant models with experimental data at a constant water flow rate due to the nonlinearities originated by variations on the flow rate.

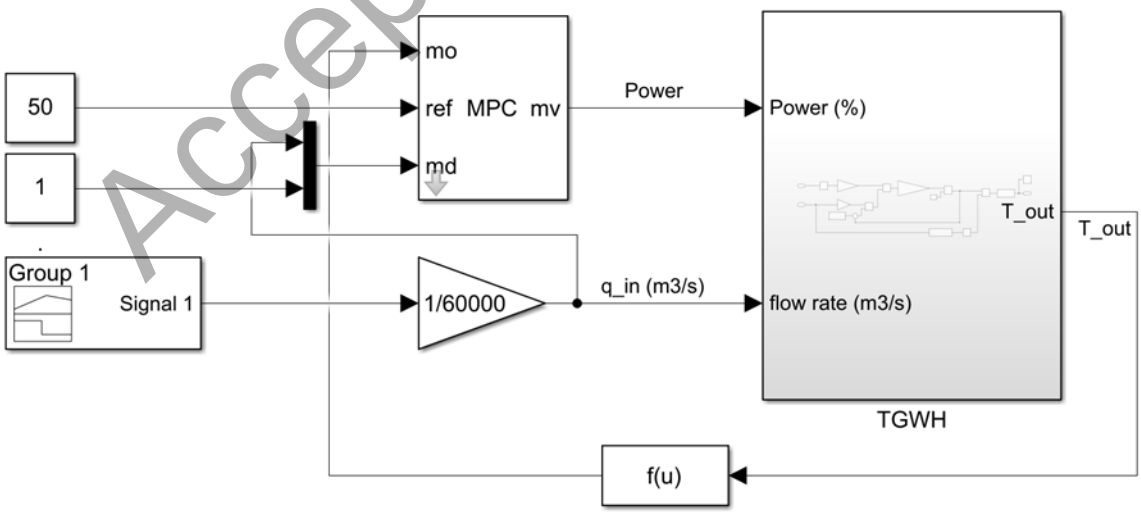

Figure 10: Simulink model diagram of GTWH combined with MPC controller.

Furthermore, due to the dominant nonlinear dynamics in TGWHs behavior, an adaptive predictive control strategy was developed. The adaptive strategy provides a new linear model at each time step when the dynamic operating conditions change. Therefore, adaptive MPC provides more accurate predictions for the next time control step compared to classical MPC that uses a fixed internal model. The adaptive strategy is implemented using the TGWH plant model within the Simulink framework extended with an adaptive MPC toolbox incorporating with an adaptation function as depicted in Figure 11. The adaptive function takes into consideration, i) resize and updated the state-space model of the plant elements, according to flow rate changes, and integrate time delays, absorbed as discrete states; and ii) evaluate the eigenvalues of the new A matrix, to ensure they are negative.

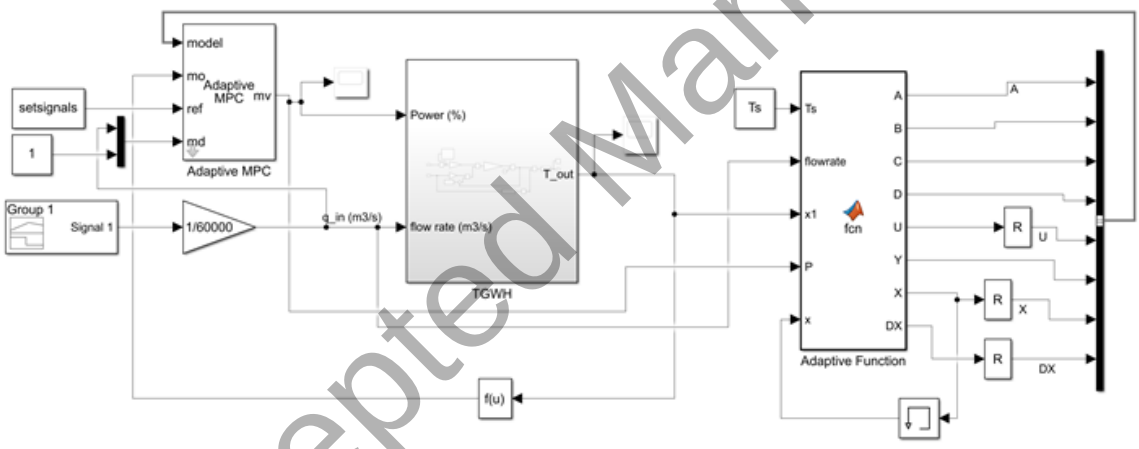

Figure 11: Simulink model diagram of GTWH combined with adaptive MPC controller.

Results and discussion

The sudden changes in water flow rate induced significant changes in the operation region of the TGWH heat cell and a reduction in the reliability of the linear model. Therefore, advanced control strategies were developed aiming at the reduction in overshoots and undershoots in water temperature, particularly in devices that are subject to sudden flow variations. All developed control strategies showed good agreement with

the temperature set point (50 °C), with a slight discrepancy in the results obtained with the FFPID controller as shown in Figure 12 and Table 1. For a cold start scenario, the response for MPC and adaptive MPC are almost coincident, while the FFPID controller presents a higher rise time. The PID parameters (Kp=0.3; Ki=0.01; Kd=1) were empirically adjusted and not fully optimized. Figure 13 shows the thermal power signal generated by the controller, a restricted value between 0 - 100%. The MPC and adaptive MPC prediction horizon were defined to be always at least one step greater than the system delay, in this system, the longer time delay occurs for the minimum water flow rate. The control horizon was assumed to be lower than the prediction horizon, in order to reduce the computational time and was tuned by try and error. For the presented simulations, the parameters of MPC, are m=5, p=66, and Ts=250ms, and adaptive MPC, are m=20, p=50, Ts=500ms.

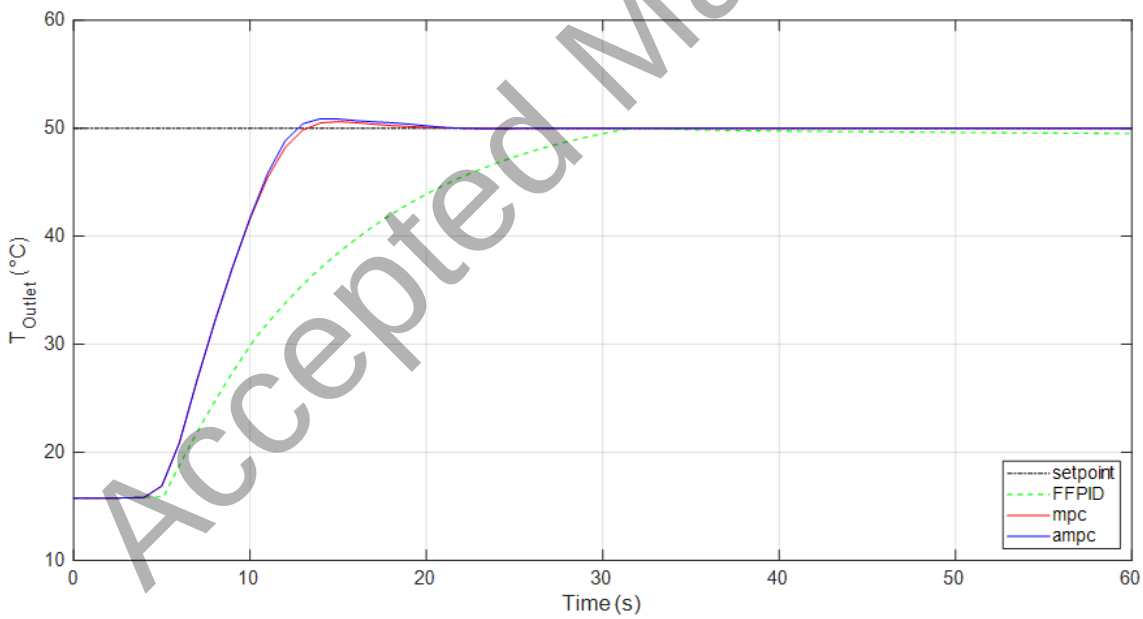

Figure 12: TGWH simulated using different control strategies at the linearized flowrate operation point (10 L/m).

Table 1 - Controllers response for cold start with 10 L/min. water flow rate.

	FFPID	MPC	aMPC
Rise time (s)	17.5	5.8	5.7
Settling time 5% (s)	26.9	12.0	11.8
Peak (°C)	50.0	50.6	50.9
Overshoot (%)	0.0	1.2	1.8

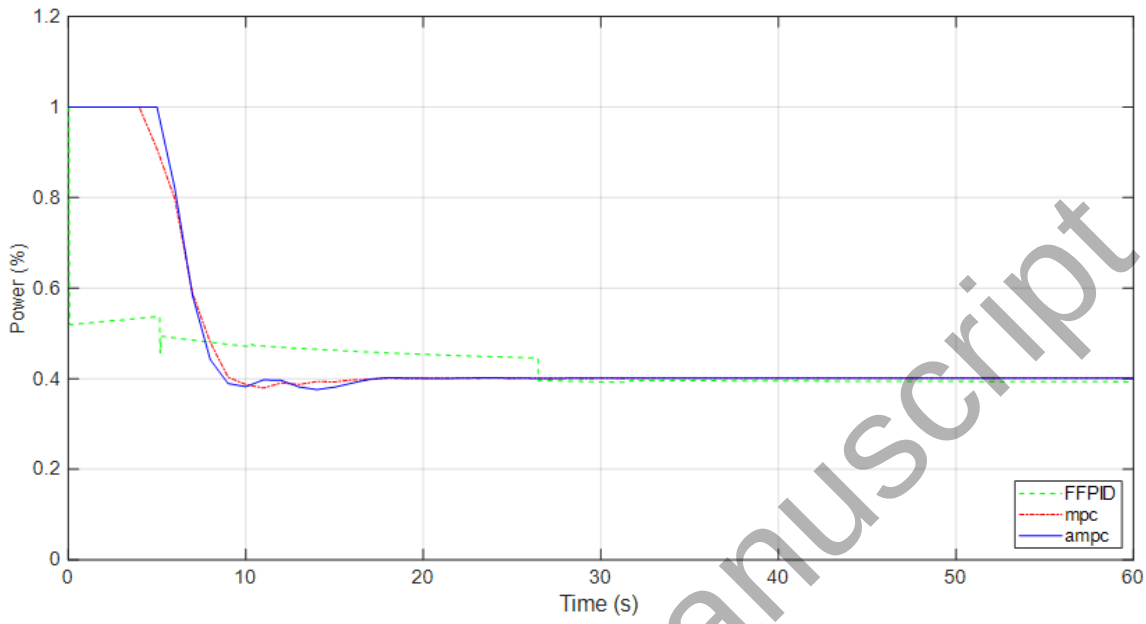

Figure 13: Controller output (Power) percentage for different control strategies at linearized flowrate.

As previously mentioned, the model predictive control is a suitable solution for non-linear systems, as is the case of instantaneous water heating devices. It can be noted that the adaptive MPC has a superior performance in temperature stability in the event of sudden variations in the water flow, as shown by the simulation results presented in Figure 14 and Table 2. The water flow rate varies sharply from 10 L/min to 3 L/min and back to 10 L/min, and the water temperature presents negligible overshoots and undershoots. The FFPID power overshoot, which appears suddenly at the change of flowrate, is due to the algebraic mathematical equation that estimates the thermal power (Eq. 4). However, this has practically no effect on temperature due to the high thermal inertia. Adaptive MPC presents a shorter settling time when compared with the FFPID and has a fast response to flow rate changes than the MPC.

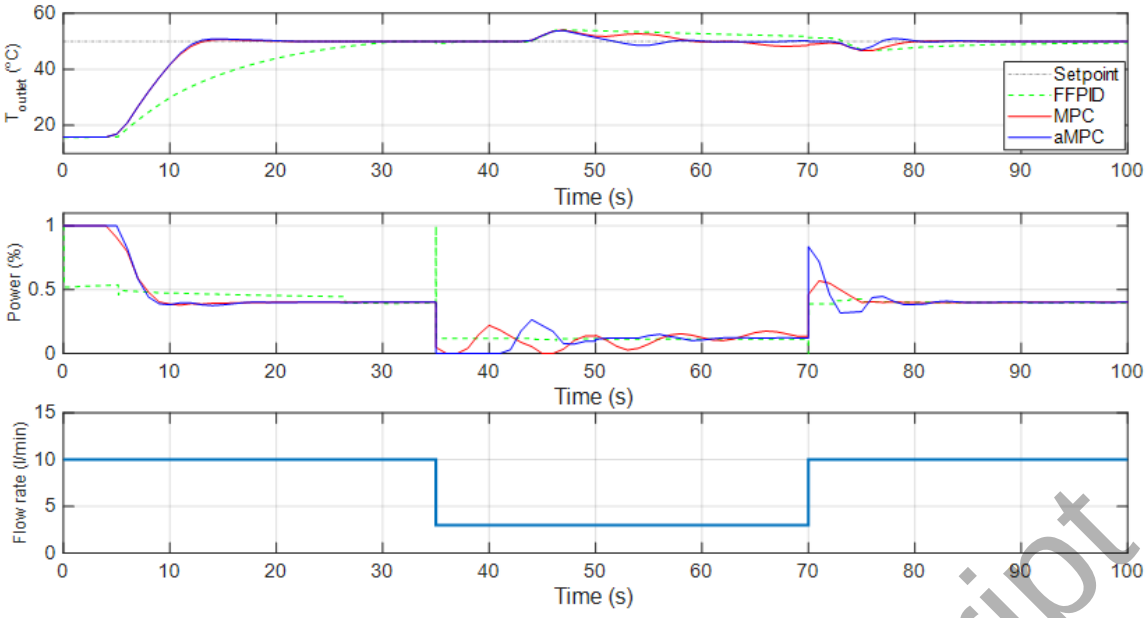

Figure 14: Non- Linear TGWH simulated using different control strategies and variation flowrate.

Table 2 - Controllers response for sudden changes in water flow rate.

		FFPID	MPC	aMPC
Flowrate decrease	Settling time 5% (s)	42.9	99.2	31
	Overshoot (%)	8.3	8.0	7.7
Flowrate increase	Settling time 5% (s)	15.5	9.7	14.5
	Undershoot (%)	6.8	6.8	6.2

Figure 15 and Table 3 present the simulation results for a cold start with a reduced water flow rate (2 L/min), well below the flow rate value used in the linearization of the model (10 L/min). The results obtained with the FFPID and classic MPC controllers fall short of those obtained with the adaptive MPC that presents a reduced overshoot and fast stabilization. These results were predictable since the adaptive version of the MPC uses plant models adapted to the various regions of operation and thereby reducing model mismatch.

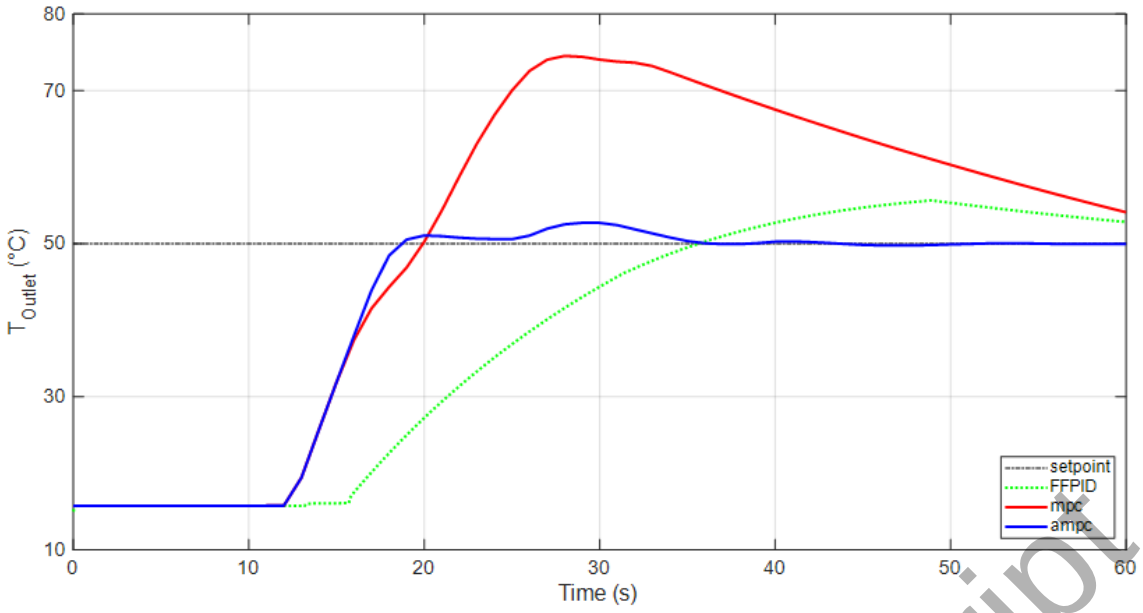

Figure 15: Non- Linear TGWH simulated using different control strategies in a situation of a cold start at 2L/min.

Table 3 - Controllers response for cold start with 2 L/min water flow rate.

	FFPID	MPC	aMPC
Rise time (s)	15.4	6.0	4.6
Settling time 5% (s)	65.6	70.7	32.3
Peak (°C)	55.6	73.6	52.7
Overshoot (%)	11.3	47.2	5.4

Conclusion and future work

This research work aimed to develop an advanced control methodology to improve the performance of the instantaneous gas water heaters. The study intended to reduce the instability of the water temperature, which occurs due to the nonlinearities and time-varying delays associated with the TGWH's devices. An interesting finding of the study, but not entirely surprising, is that adaptive model predictive control compared with FFPID and classical MPC control strategies, presents a superior performance in the temperature stabilization when sudden flow rate changes occur.

Despite the promising performance of the MPC adaptive controller, its implementation requires high computational resources and memory space.

The opening of TGWH manufacturers to the use of these control techniques requires their implementation in microcontrollers with limited computational and memory resources. In this context, the sequence of this work assumes the development of a low computational code that can be embedded in low-cost hardware.

List of symbols

C	Thermal capacitance
c_p	Specific heat capacity
J	Cost function
L	Length
M	Control horizon
m	Mass
$\dot{m}$	Mass flow rate
n	Number
P	Prediction Horizon
$\dot{Q}$	Thermal power
r	Radius
r	Reference value
S	The scale factor
T	Temperature
t	Time
u	Input
W	Tuning weight
y	Output
Z	Sequence of manipulated variables

Greek symbols

ε	Slack variable
ρ_ε	Constraint violation penalty weight

Abbreviations

aMPC	Adaptive model predictive control
FF	Feedforward
HIL	Hardware in the loop
HPWH	Heat pump water heater
MD	Measured disturbances
MPC	Model predictive control
MV	Manipulated variables
LTI	Linear time-invariant
PID	Proportional Integrative Derivative
QP	Quadratic programming
set	Set point
TGWH	Tankless gas water heater
TWH	Tankless water heater

Ts	Time sample
W	Water

Acknowledgement, this work was supported by the projects UIDB/00481/2020 and UIDP/00481/2020 - FCT - Fundação para a Ciencia e a Tecnologia; and CENTRO-01-0145-FEDER-022083 - Centro Portugal Regional Operational Programme (Centro2020), under the PORTUGAL 2020 Partnership Agreement, through the European Regional Development Fund.

References

Aliskan, I. (2018) 'Adaptive Model Predictive Control for Wiener Nonlinear Systems', *Iran J Sci Technology - Transactions of Electrical Engineering*, 43, pp. 361–377. doi: 10.1007/s40998-018-0159-0.

Bemporad, A., Ricker, N. and Morari, M. (2019) *Model Predictive Control Toolbox - User's Guide*. The MathWorks, Inc. Available at: https://www.mathworks.com/help/pdf_doc/mpc/mpc_ug.pdf.

Bobal, V. *et al.* (2013) 'Adaptive predictive control of time-delay systems', *Computers and Mathematics with Applications*. Elsevier Ltd, 66(2), pp. 165–176. doi: 10.1016/j.camwa.2013.01.035.

Bobál, V. *et al.* (2012) 'Matlab toolbox for CAD of self-tuning control of time-delay processes', *Proceedings of The International Workshop on Applied Modeling & Simulation*, pp. 44–49.

Bobál, V. *et al.* (2014) 'Adaptive predictive control of laboratory heat exchanger', *WSEAS Transactions on Systems*, 13(1), pp. 470–481.

Bourke, G., Bansal, P. and Raine, R. (2014) 'Performance of gas tankless (instantaneous) water heaters under various international standards', *Applied Energy*. Elsevier Ltd, 131, pp. 468–478. doi: 10.1016/j.apenergy.2014.06.008.

Camacho, E. and Bordons, C. (1998) *Advanced Textbooks in Control and Signal Processing: Model predictive control*. 2nd edn. © Springer-Verlag London.

Chen, W. *et al.* (2011) 'Improved Nonlinear Model Predictive Control Based on Genetic Algorithm', Zheng, T. (ed.) *Advanced Model Predictive Control*. 5th edn. IntechOpen. doi: 10.5772/18778.

Costa, V., Ferreira, J. and Guilherme, D. (2016) 'Modeling and simulation of tankless gas water heaters to reduce temperature overshoots and undershoots', *12th International Conference on Heat Transfer, Fluid Mechanics and Thermodynamics (HEFAT 2016)*, pp. 1404–1409.

Devasia, S. (2002) 'Should model-based inverse inputs be used as feedforward under

plant uncertainty?', *IEEE Transactions on Automatic Control*. IEEE, 47(11), pp. 1865–1871. doi: 10.1109/TAC.2002.804478.

Ehtiwesh, I. A. S. and Durović, Ž. (2009) 'Comparative analysis of different control strategies for electro-hydraulic servo systems', *World Academy of Science, Engineering and Technology*, 32(8), pp. 906–909. doi: 10.5281/zenodo.1073621.

Fernández-Seara, J. *et al.* (2013) 'Experimental analysis of an on demand external domestic hot water production system using four control strategies', *Applied Energy*, pp. 85–96. doi: 10.1016/j.apenergy.2012.10.030.

Grant, P., Burch, J. and Krarti, M. (2011) 'Behavior and testing performance of a gas tankless water heater', *ASME 2011 5th International Conference on Energy Sustainability, ES 2011*, pp. 1035–1041. doi: 10.1115/ES2011-54868.

Haissig, C. M. and Woessner, M. (2000) 'Adaptive fuzzy algorithm for domestic hot water temperature control of a combi-boiler', *HVAC&R Research*, 6(2), pp. 117–34.

Hang, C. C., Lim, K. W. and Chong, B. W. (1989) 'A dual-rate adaptive digital smith predictor', *Automatica*, 25(1), pp. 1–16. doi: 10.1016/0005-1098(89)90115-5.

Henze, G. P., Yuill, D. P. and Coward, A. H. (2009) 'Development of a model predictive controller for tankless water heaters', *HVAC and R Research*, 15(1), pp. 3–23. doi: 10.1080/10789669.2009.10390823.

Holiš, R. and Bobál, V. (2007) 'Matlab toolbox for self-tuning predictive control of time-delayed systems', *Proceedings 32nd European Conference on Modelling and Simulation*.

Holiš, R. and Bobál, V. (2015) 'Possible approaches of disturbance compensation of time-delayed systems using predictive control', *Proceedings 29th European Conference on Modelling and Simulation*.

Hunt, L. R., Meyer, G. and Su, R. (1996) 'Noncausal inverses for linear systems', *IEEE Transactions on Automatic Control*, 41(4), pp. 608–611. doi: 10.1109/9.489285.

Khaled, N. and Pattel, B. (2018) *Practical Design and Application of Model Predictive Control*. Butterworth-Heinemann. Available at: https://www.elsevier.com/books-and-journals.

Laurencio-Molina, J. C. and Salazar-Garcia, C. (2018) 'Design of an Artificial Neural Network Controller for a Tankless Water Heater by Using a Low-Profile Embedded System', in *2018 IEEE International Work Conference on Bioinspired Intelligence, IWOBI 2018 - Proceedings*. doi: 10.1109/IWOBI.2018.8464196.

Li, P. *et al.* (2015) 'Simulation and experimental demonstration of model predictive control in a building HVAC system', 21, pp. 721–33. doi: 10.1080/23744731.2015.1061888.

Oliveira, J. *et al.* (2019) 'Development of a virtual bench for simulation and monitoring of water heating devices', in *2nd International Conference of TEMA: Mobilizing Projects*.

Quintã, A. F. *et al.* (2019) 'Simulation models for tankless gas water heaters', *Applied Thermal Engineering*, 148, pp. 944–52. doi: 10.1016/j.applthermaleng.2018.11.095.

Santos, T. L. M. *et al.* (2012) 'On the explicit dead-time compensation for robust model predictive control', *Journal of Process Control*, 22(1), pp. 236–246. doi: 10.1016/j.jprocont.2011.08.003.

Vieira, J. A., Dias, F. M. and Mota, A. M. (2005) 'Hybrid neuro-fuzzy network-priori knowledge model in temperature control of a gas water heater system', in *Proceedings - HIS 2005: Fifth International Conference on Hybrid Intelligent Systems*. doi: 10.1109/ICHIS.2005.60.

Wang, L., Zang, H. and Ning, Y. (2011) 'The gas water heater control system design based on fuzzy control', in *2011 International Conference on Electric Information and Control Engineering, ICEICE 2011 - Proceedings*. IEEE, pp. 840–843. doi: 10.1109/ICEICE.2011.5778171.

Wanjiru, E. M., Sichilalu, S. M. and Xia, X. (2017) 'Model predictive control of heat pump water heater-instantaneous shower powered with integrated renewable-grid energy systems', *Applied Energy*. Elsevier Ltd, 204, pp. 1333–1346. doi: 10.1016/j.apenergy.2017.05.033.

Xu, K. *et al.* (2008) 'A dynamic neuro-fuzzy controller for gas-fired water heater', in *Proceedings - 4th International Conference on Natural Computation, IEEE*, pp. 240–244. doi: 10.1109/ICNC.2008.824.

Yuill, D. P., Coward, A. H. and Henze, G. P. (2010) 'Performance comparison of control methods for tankless water heaters', *HVAC and R Research*, 16(5), pp. 677–690. doi: 10.1080/10789669.2010.10390927.